Basic Parameters

Model		-	GWH12AOCXD-K6DNA2C
Product Code		-	/CB597000600
Power Supply	**Rated Voltage**	V~	220-240
	Rated Frequency	Hz	50
	Phases	-	1
Power Supply Mode		-	Outdoor
Cooling Capacity		W	3510
Heating Capacity		W	3810
Cooling Power Input		W	877
Heating Power Input		W	952
Cooling Current Input		A	4.1
Heating Current Input		A	4.5
Rated Input		W	1800
Rated Cooling Current		A	6.5
Rated Heating Current		A	8
Air Flow Volume		m^3/h	720/600/570/530/500/460/430/180
Dehumidifying Volume		L/h	1.4
EER		W/W	4
COP		W/W	4
SEER		-	8.5
SCOP (Average/Warmer/Colder)		-	4.6/5.6/3.6
Application Area		m^2	16-24

Indoor Unit Parameters

Indoor Unit Model	-	GWH12AUCXD-K6DNA2C/I
Indoor Unit Product Code	-	CB597N00600
Fan Type	-	Cross-flow
Fan Diameter Length (D×L)	mm	Φ98X630
Cooling Speed	r/min	1400/1200/1120/1050/980/920/750/500
Heating Speed	r/min	1400/1200/1140/1080/1020/960/900
Fan Motor Power Output	W	15
Fan Motor RLA	A	0.2
Fan Motor Capacitor	μF	/
Evaporator Form	-	Aluminum Fin-copper Tube
Evaporator Pipe Diameter	mm	Φ5
Evaporator Row-fin Gap	mm	2-1.4
Evaporator Coil Length (L×D×W)	mm	634X22.8X304.8
Swing Motor Model	-	MP24BA/MP24AK/MP24HF
Swing Motor Power Output	W	1.5/1.5/1.5
Fuse Current	A	3.15
Sound Pressure Level	dB (A)	Cooling:43/39/37/35/32/30/24/19 Heating:44/39/37/35/33/31/29
Sound Power Level	dB (A)	Cooling:60/53/51/49/46/44/38/33 Heating:60/53/51/49/47/45/43
Dimension (W×H×D)	mm	837X293X200
Dimension of Carton Box (L×W×H)	mm	891X357X261
Dimension of Package (L×W×H)	mm	896X373X272
Net Weight	kg	9.5
Gross Weight	kg	11.5

Outdoor Unit Parameters

Outdoor Unit Model	-	GWH12AOCXD-K6DNA2C/O(LCLH)
Outdoor Unit Product Code	-	CB575W00700
Compressor Manufacturer	-	ZHUHAI LANDA COMPRESSOR CO., LTD
Compressor Model	-	QXF-A098zE170
Compressor Oil	-	ZE-GLES RB68GX or equivalent
Compressor Type	-	Rotary
Compressor LRA.	A	/
Compressor RLA	A	3.9
Compressor Power Input	W	/
Compressor Overload Protector	-	/
Throttling Method	-	Electron expansion valve
Set Temperature Range	ºC	Cooling:16~30; Heating:8~30
Cooling Operation Ambient Temperature Range	ºC	-15~50
Heating Operation Ambient Temperature Range	ºC	-25~30
Condenser Form	-	Aluminum Fin-copper Tube
Condenser Pipe Diameter	mm	Φ7
Condenser Rows-fin Gap	mm	2-1.4
Condenser Coil Length (L×D×W)	mm	761.5X38.1X528
Fan Motor Speed	rpm	850
Fan Motor Power Output	W	30
Fan Motor RLA	A	0.4
Fan Motor Capacitor	μF	/
Outdoor Unit Air Flow Volume	m^3/h	2200
Fan Type	-	Axial-flow

Fan Diameter	mm	Φ420
Defrosting Method	-	Automatic Defrosting
Climate Type	-	T1
Isolation	-	I
Moisture Protection	-	IPX4
Permissible Excessive Operating Pressure for the Discharge Side	MPa	4.3
Permissible Excessive Operating Pressure for the Suction Side	MPa	2.5
Sound Pressure Level	dB (A)	53
Sound Power Level	dB (A)	64
Dimension (W×H×D)	mm	802X555X350
Dimension of Carton Box (L×W×H)	mm	869X395X594
Dimension of Package (L×W×H)	mm	872X398X620
Net Weight	kg	30
Gross Weight	kg	32.5
Refrigerant	-	R32
Refrigerant Charge	kg	0.8

Connection Pipe Parameters

Connection Pipe Length	m	5
Connection Pipe Gas Additional Charge	g/m	16
Outer Diameter Liquid Pipe	inch	1/4
Outer Diameter Gas Pipe	inch	3/8
Max Distance Height	m	10
Max Distance Length	m	20

Note: The connection pipe applies metric diameter.
The above data is subject to change without notice. Please refer to the nameplate of the unit.

3.2 Capacity Variation Ratio According to Temperature

Heating operation ambient temperature range is -25°C~30°C.

Cooling ▶

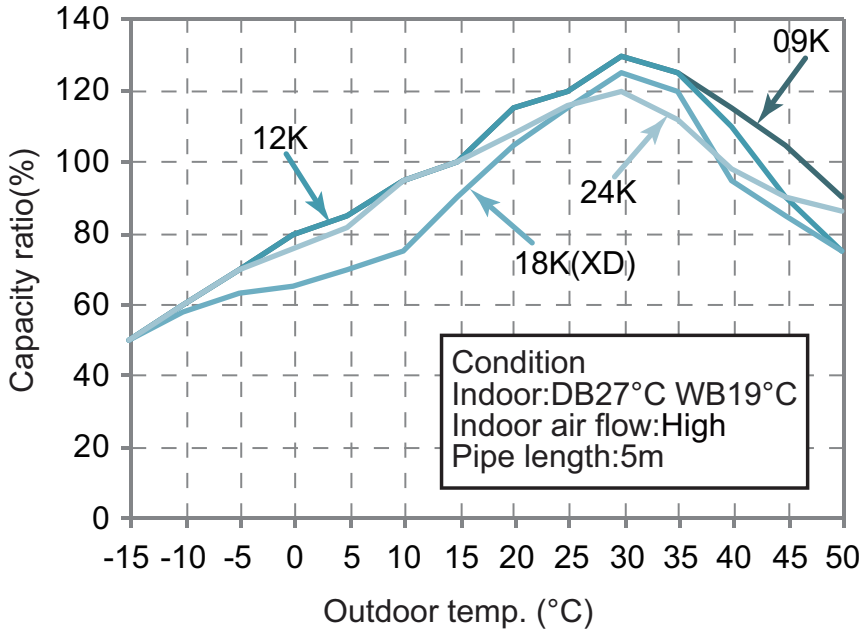

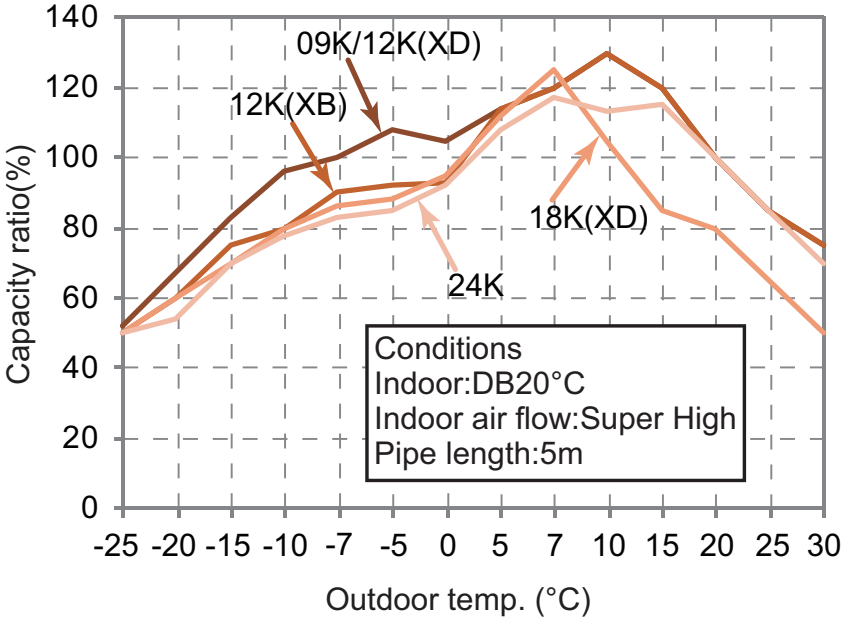

◀ Heating

Heating operation ambient temperature range is -15°C~30°C.

Cooling ▶

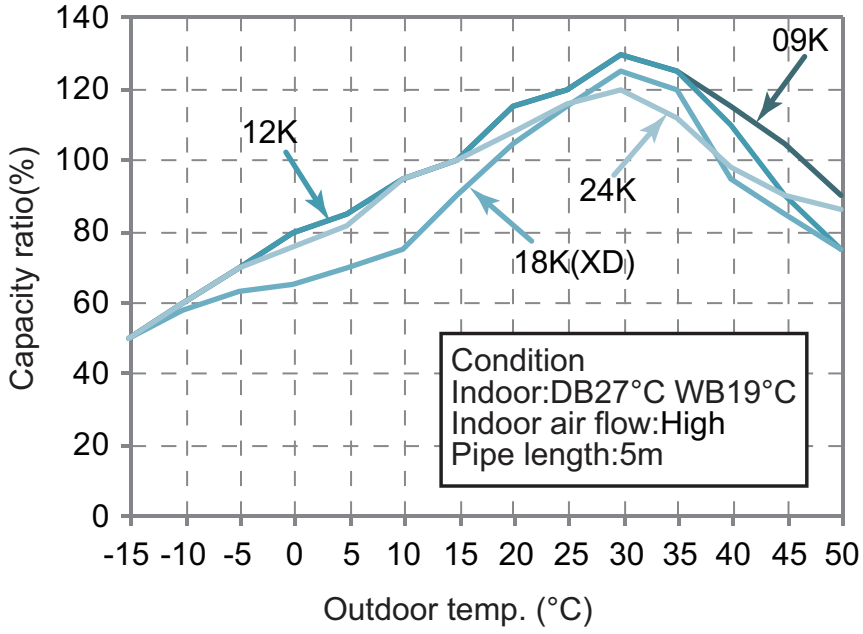

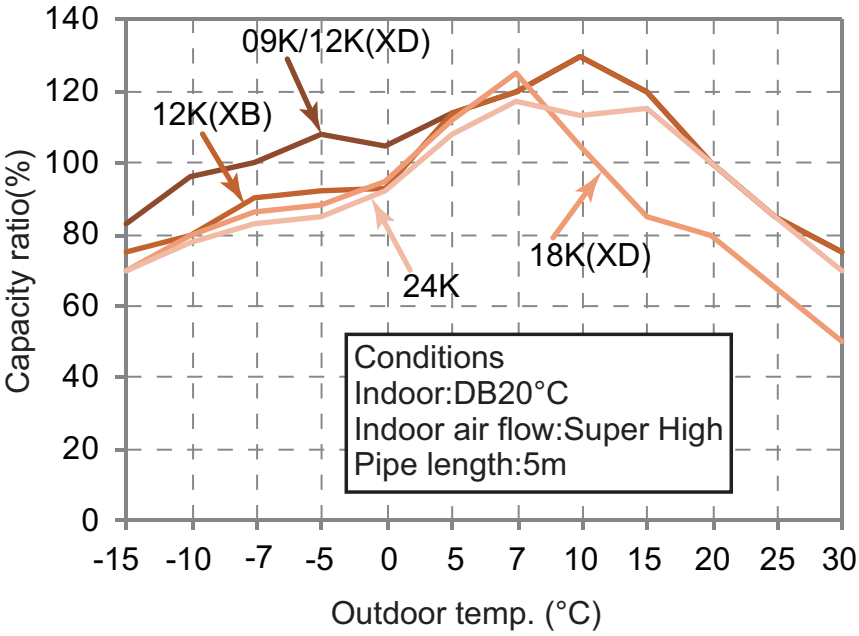

◀ Heating

4. Outline Dimension Diagram

4.1 Indoor Unit

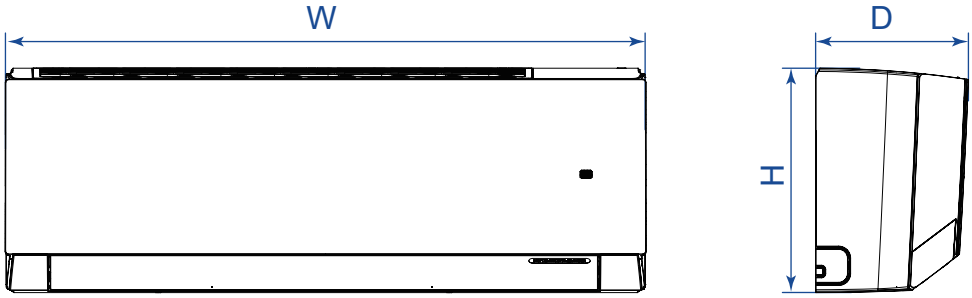

AUC

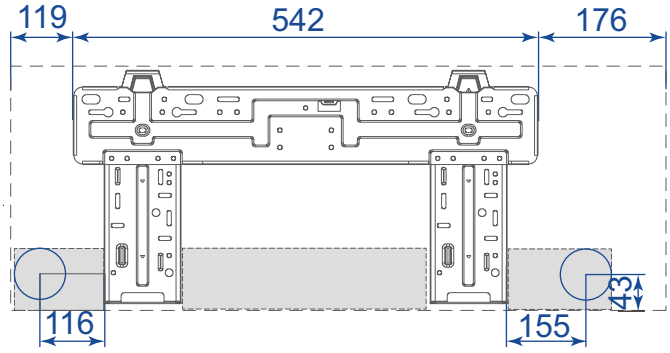

AUD

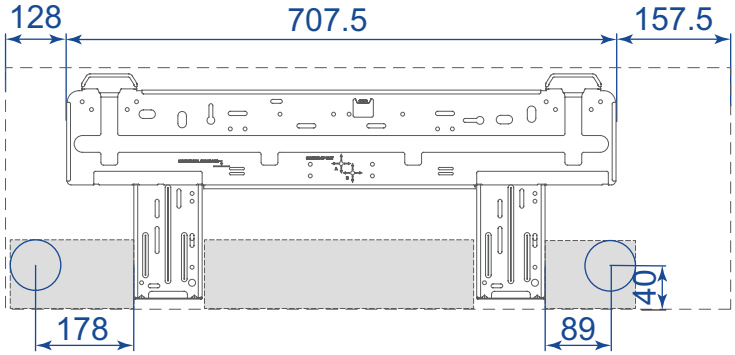

Unit: mm

Indoor Unit Model	W	H	D
AUC	837	293	200
AUD	993	311	222

4.2 Outdoor Unit

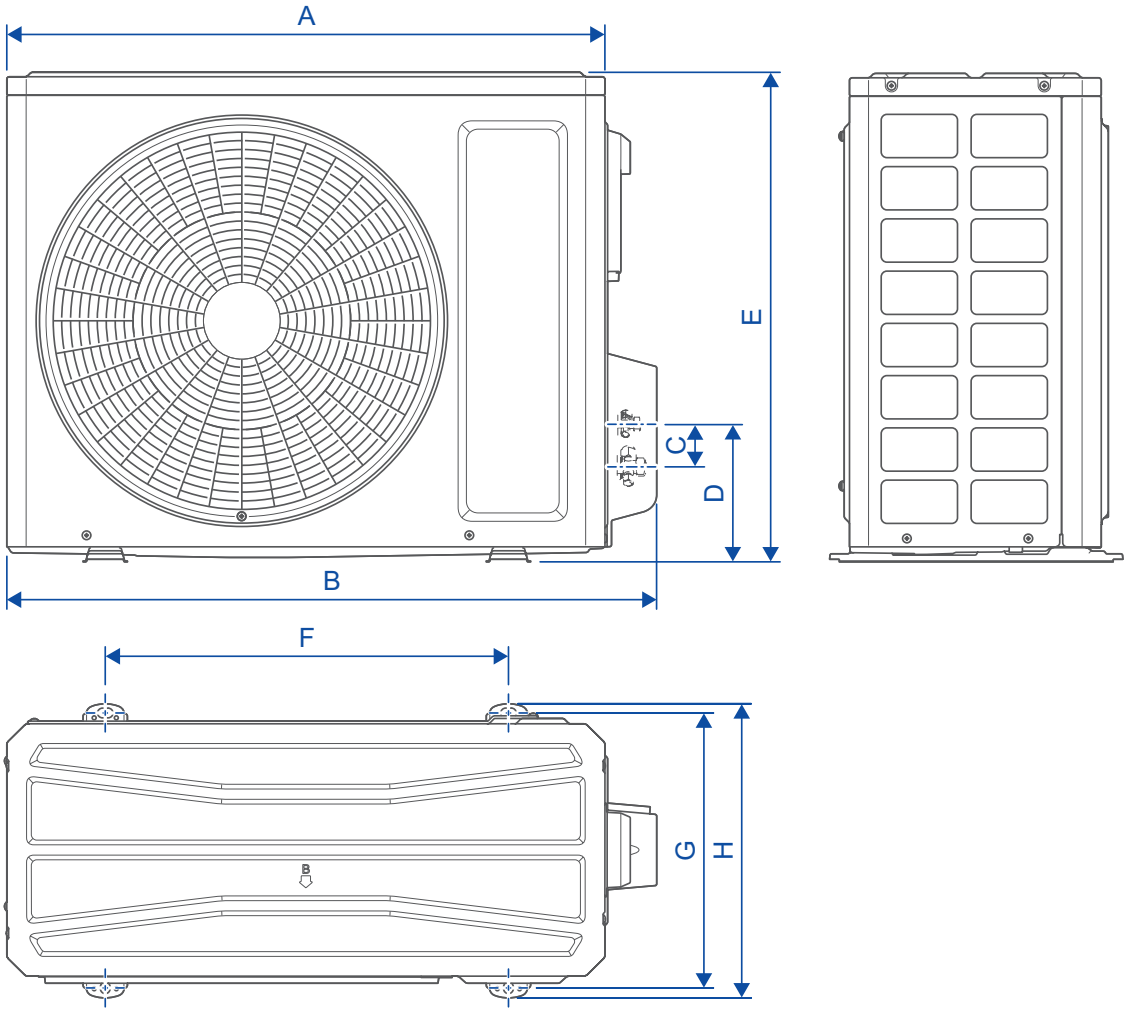

NOTE: The appearance of outdoor unit is for reference only.

Unit: mm

Outdoor Unit Model	A	B	C	D	E	F	G	H
XB	675	732	65	163	555	455	310	330
XD	745	802	65	163	555	513	331	350
XE	805	873	65	164	555	528	349	376
XF	889	958	65	165.6	660	570	371	402